QoS Performance Analysis for CSMA/CA in IEEE802.15.5

Yon Lan, Bo Zhang and Zhicheng Chen

Journal of Networks July 2014

Presenter: Bob Kinicki

Internet of Things

Fall 2015

WPI

Introduction

- Authors argue that slotted CSMA/CA is particularly suited for WSNs where traffic is discrete or non-cyclical.
- Focus is on beacon-enabled mode for IEEE802.15.4.
- QoS is used constantly in this paper but the authors' simulated application is mathematically-based with no real intuitive notion of QoS discussed.

IEEE 802.15.4 Frame Format

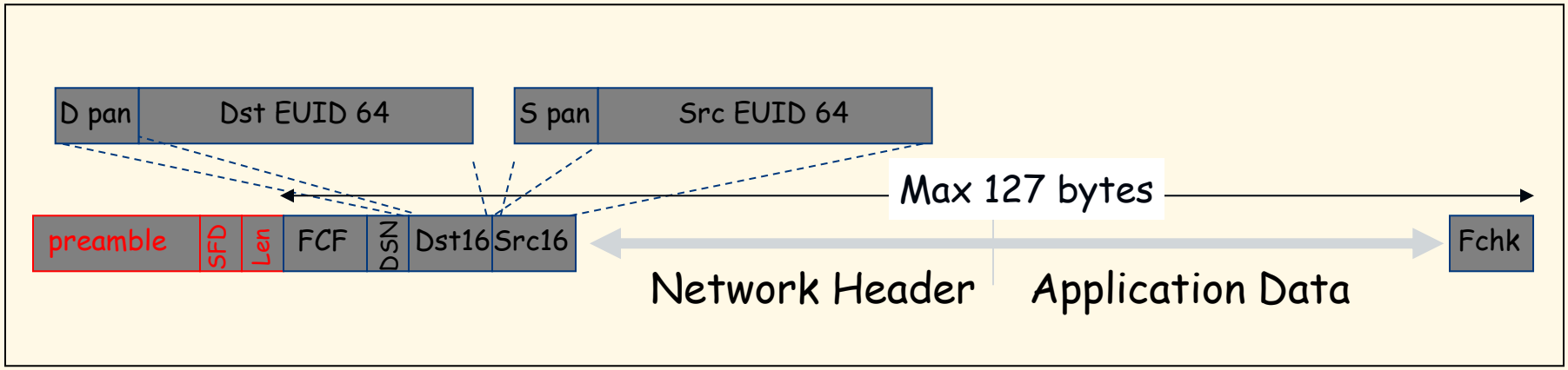

- Low Bandwidth (250 kbps), low power (1 mW) radio
- Moderately spread spectrum (QPSK) provides robustness
- Simple MAC allows for general use
  - Many TinyOS-based protocols (MintRoute, LQI, BVR, …), TinyAODV, Zigbee, SP100.11, Wireless HART, …
  - 6LoWPAN => IP
- Choice among many semiconductor suppliers
- Small packets used to keep packet error rate low and permit media sharing.

Culler slide

Outline

- Introduction
- Beacon-Enabled IEEE802.15.4 and Superframe Structure
- Simulation Methodology
- Analysis of Simulation Results
- Conclusion
- Critique

Beacon-Enabled IEEE802.15.4

- In beacon-enabled mode, communication behavior is constrained by superframe structure which is synchronized when coordinator periodically sends beacon frames.
- Each sensor node's communication process happens in the allocated slot time.

Figure 1: 802.15.4 Superframe

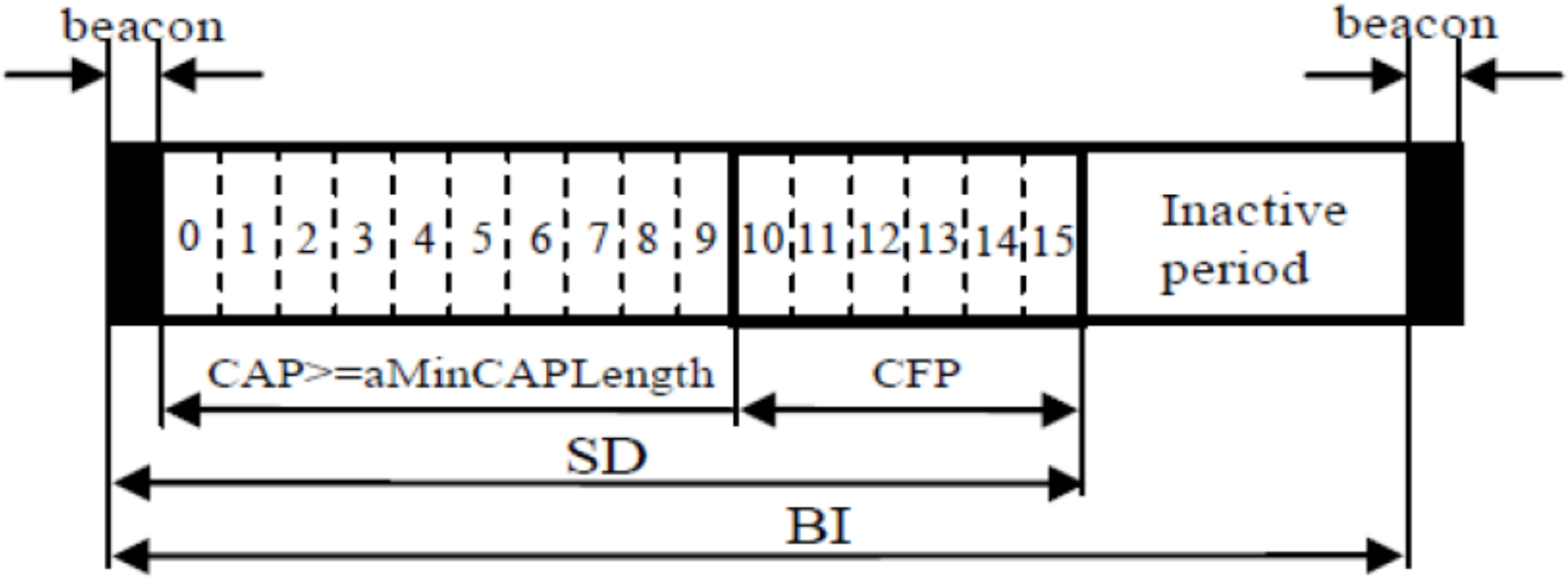

Figure 1. The IEEE 802.15.4 superframe structure

Beacon Interval (BI) and Superframe Duration (SD)

- BI is defined by BO (Beacon Order).
- SD is defined by SO (Superframe Order).

$$BI = \text{aBaseSuperframDuration} \times 2^{BO}$$

$$\text{SD} = \text{aBaseSuperframDuration} \times 2^{SO} \qquad (1)$$

$$(0 \le SO \le BO \le 14)$$

Duty Cycle (DC)

- Duty cycle of beacon-enabled 802.15.4 is defined as:

$$
\begin{aligned}
DC &= SD / BI \\
&= \text{aBaseSuperframDuration} \times 2^{SO} / \\
&\quad \text{aBaseSuperframDuration} \times 2^{BO} \\
&= 2^{SO-BO}
\end{aligned}
\qquad (2)
$$

Example: BO-SO = 2

DC = 2^{-2} = $\frac{1}{4}$ = 25%

Sleep Time (ST)

- For each BI, the inactive period is the node sleeping time (ST) which can be calculated as:

$$
\begin{aligned}
ST &= BI - SD \\
&= BI - BI \times DC \\
&= BI - BI \times 2^{SO-BO} \\
&= aBaseSuperframDuration \times 2^{BO} \times \left(1 - \frac{1}{2^{BO-SO}}\right)
\end{aligned}
\tag{3}
$$

- Hence ST is affected by the value of BO and duty cycle (i.e., BO-SO)

Three "What if" observations

1. BO fixed; BO-SO grows:
   - ST grows and DC decreases
   - E down, D up, O down
2. BO-SO fixed; BO grows:
   - ST grows
   - E down, D up, O down
3. BO fixed; as BO-SO increases from 0 to 14, change in ST decreases.

Simulation Settings

- 10 m x 10 m simulated area, 2.4 GHz, 250 kbps, 600 sec. duration using OPNET
- Sensors deployed randomly to create star-topology. {This is very unclear!}
- Power set at 1 mW, QPSK used.
- No explanation of application traffic model:

TABLE I. PARAMETERS OF TYPICAL TRAFFIC SOURCE

Traffic Source	MSDU Interarrival Time (s)	MSDU Size (bits)	Star Time (s)	Stop Time (s)
ACK	Poission (1.0)	Poission (100)	0.0	Infinity
UnACK	Uiform (0.5,1.5)	Poission (50)	0.0	Infinity

Figure 2: OPNET Simulation

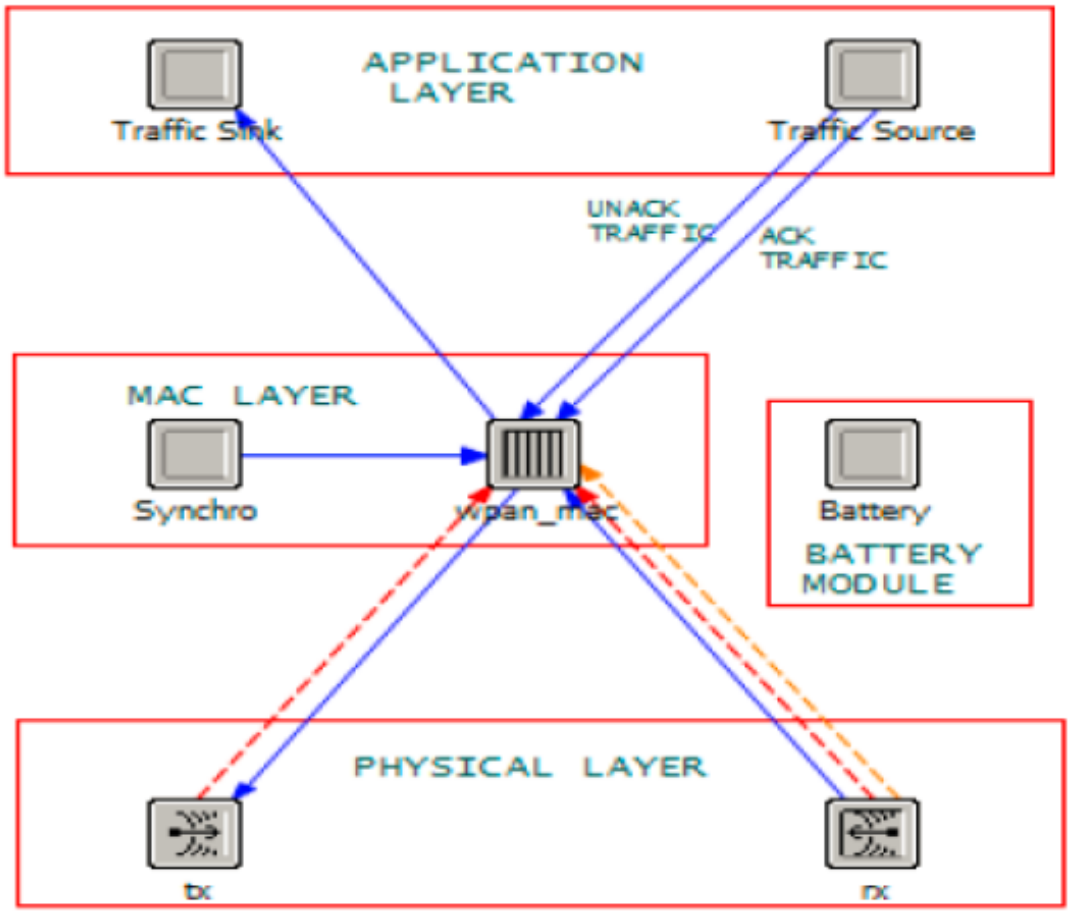

Figure 2. The simulation model of Slotted CSMA/CA based on OPNET modeler

Figure 3: 10 Node Simulation

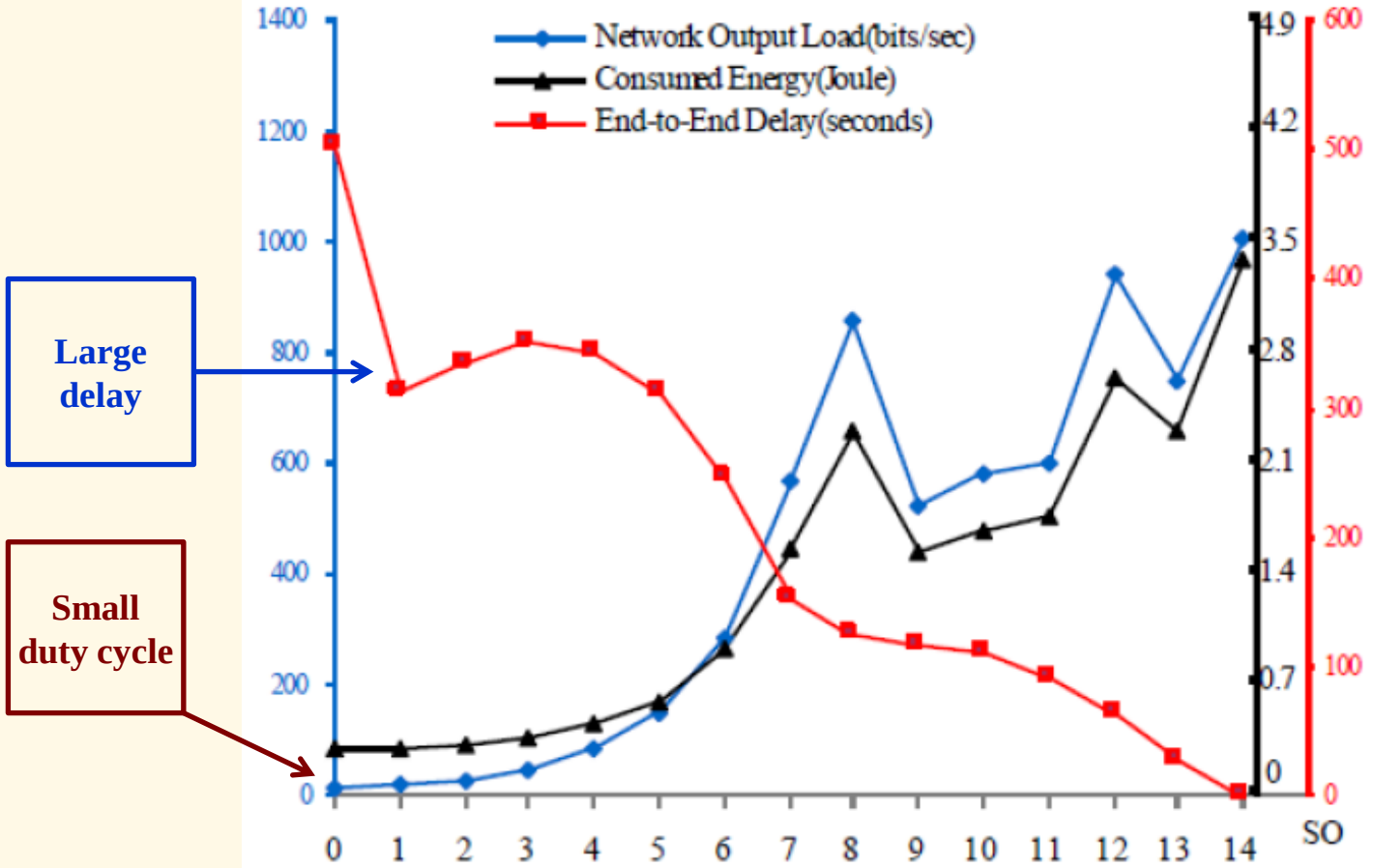

Figure 3. Relationship between QoS and different duty cycle (BO=14,10 Nodes)

Figure 4: 30 Node Simulation

Larger delay

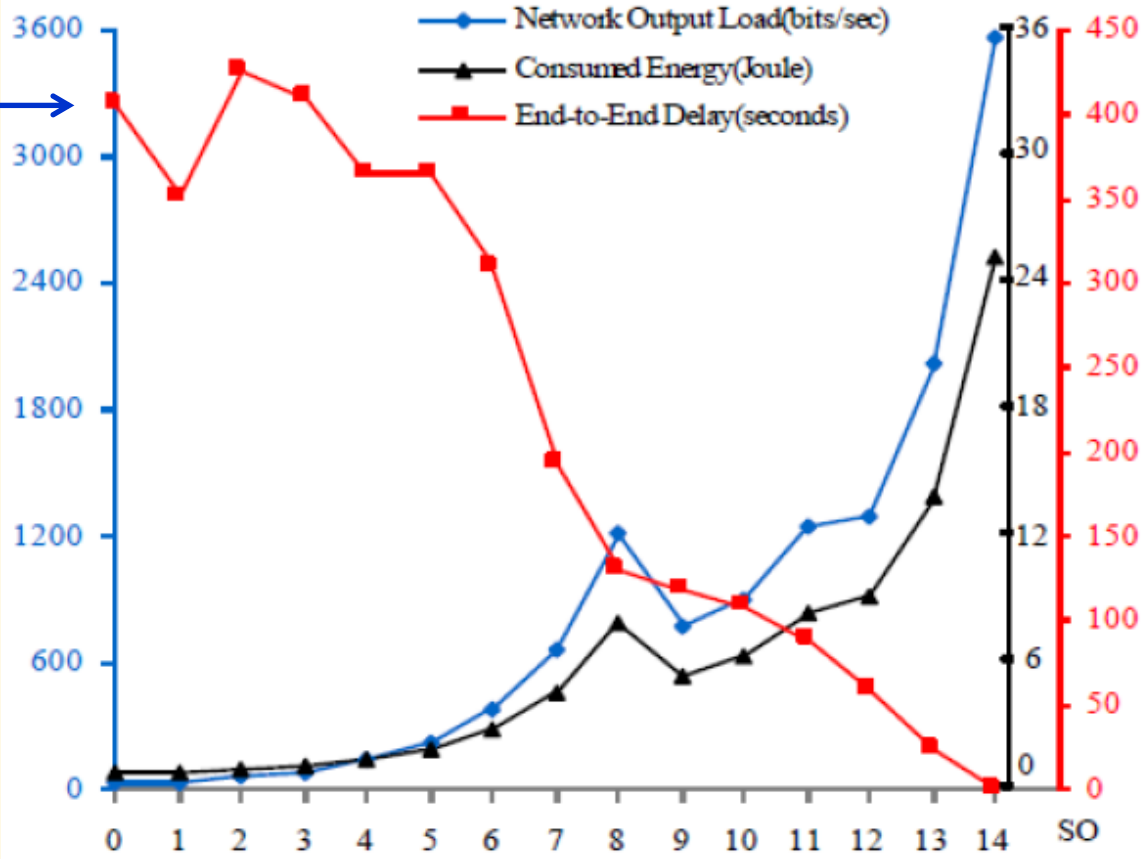

Figure 4. Relationship between QoS and different duty cycle (BO=14,30 Nodes)

Figure 5: 50 Node Simulation

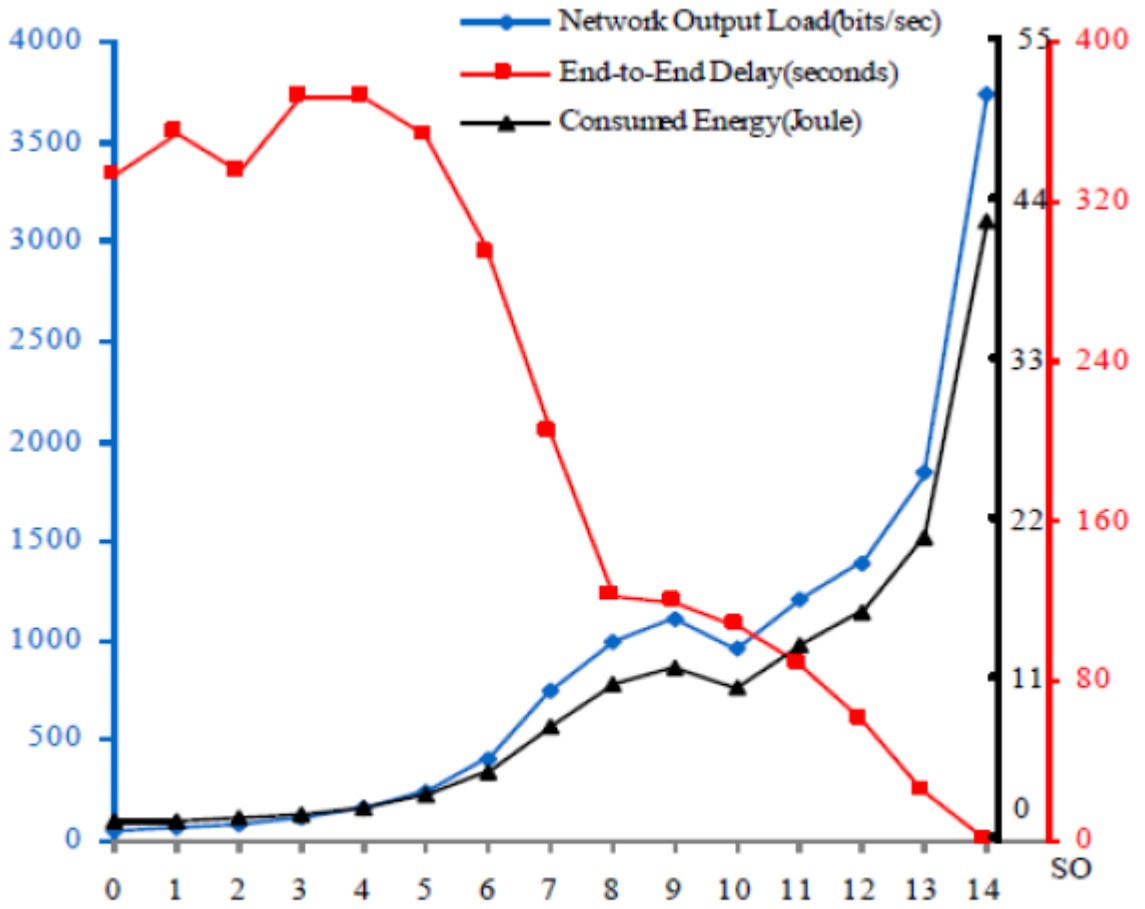

Figure 5. Relationship between QoS and different duty cycle (BO=14,50 Nodes)

Simulations Varying BO

- Authors want to study first "what if":
  - BO fixed; BO-SO varies
- Fix the number of devices at 14. {Appears to minimize slot collisions!}
- 400 seconds simulated time.
- Use Table II for traffic sources.

Table II

TABLE II. PARAMETERS OF VARIABLE TRAFFIC SOURCE

Traffic Source		MSDU Initerar rival Time(s)	MSDU Size (bits)	Star Time(s)	Stop Time(s)
Node1,2	ACK	exponential(2)	poisson(100)	0.0	infinity
	UnACK	poisson (0.2)	constant(200)	0.0	infinity
Node3,4,5,6	ACK	none	none	infinity	infinity
	UnACK	poisson (1)	constant(200)	0.0	nfinity
Node7,8	ACK	exponential(2)	poisson(100)	3.0	9.0
	UnACK	none	none	infinity	infinity
Node9,10	ACK	constant(3)	poisson (50)	0.0	infinity
	UnACK	poisson(0.2)	uniform(50,200)	0.0	infinity
Node11,12,13,14	ACK	none	none	infinity	infinity
	UnACK	exponential(0.5)	constant (160)	0.0	infinity

Why this traffic?

Figure 6: Energy vs BO

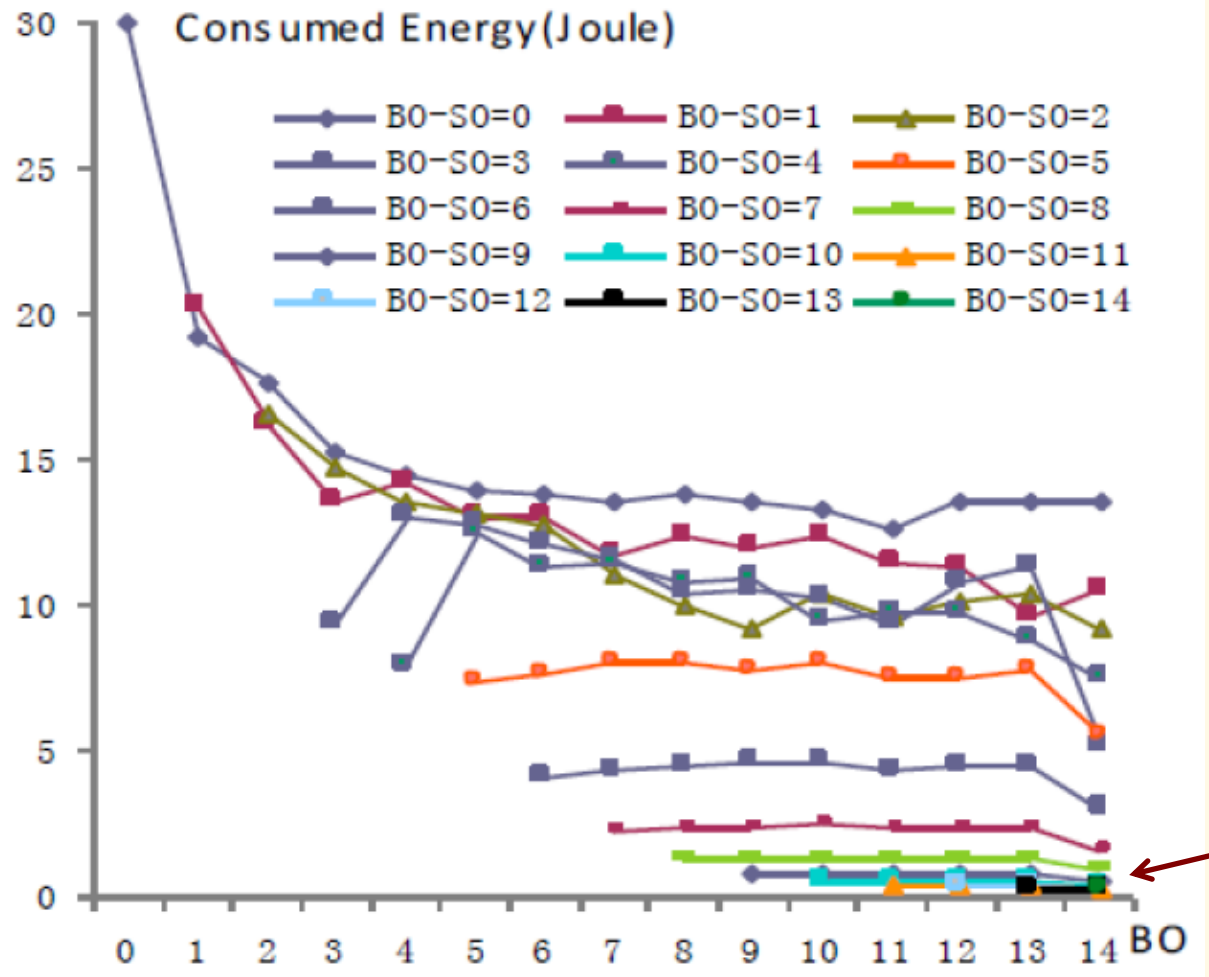

Figure 6. Relationship between energy consumption and BO

Best performance

Figure 7: Output Load vs BO

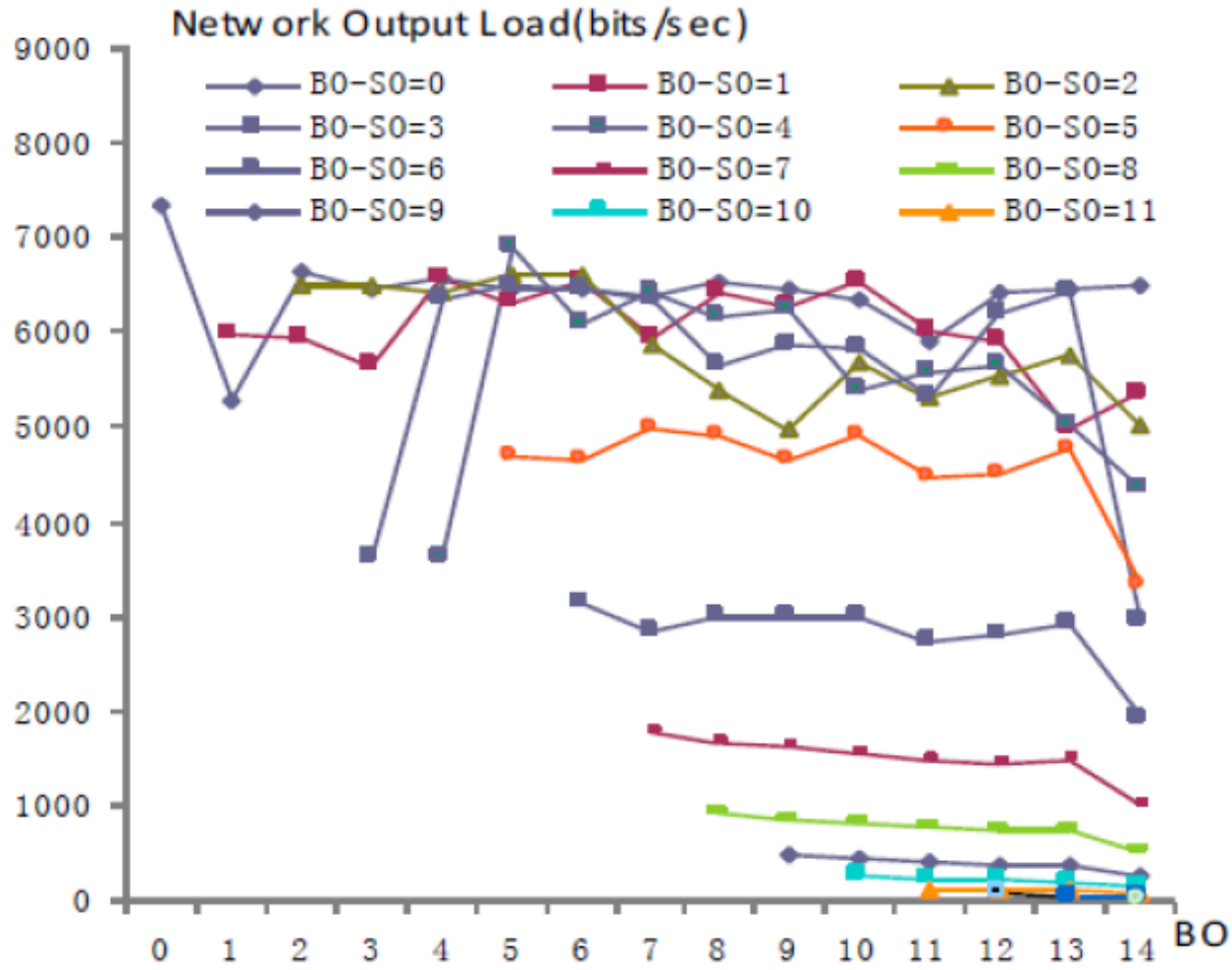

Figure 7. Relationship between network output load and BO

Figure 8: Delay vs BO

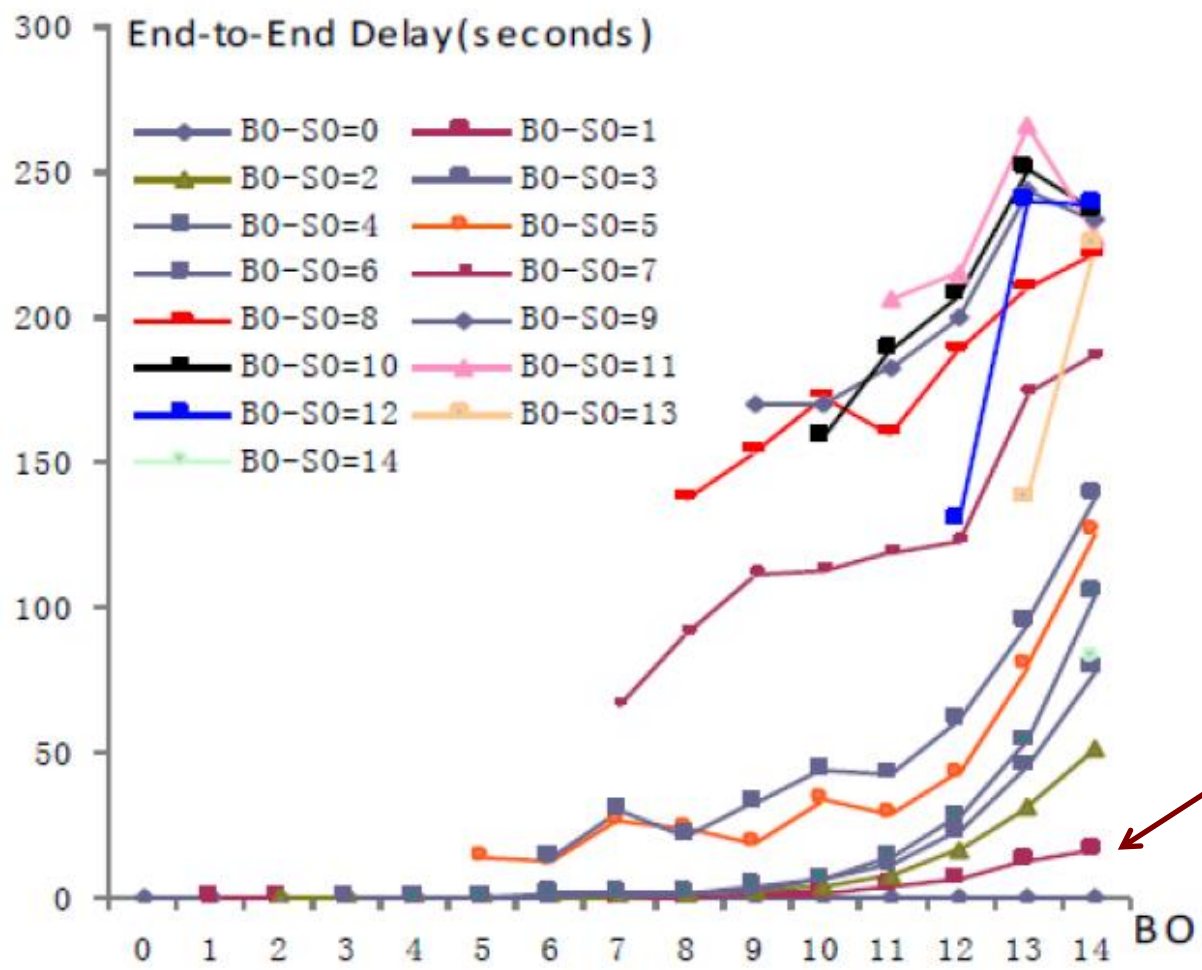

Figure 8. Relationship between end-to-end delay and BO

Best performance

Conclusions

Basically authors argue this presentation lets one see the tradeoffs in setting for beacon-enabled, slotted CSMA/CA for IEEE802.15.4

Critique

- No justification or explanation of traffic sources.
- They use QoS inappropriately – end-to-end delay never defined.
- No discussion of traffic routes.
- No sense of slotted collisions and no formal assignment to slots.
- Why only star-topology?