Bridges

Bridges Outline

- Repeaters
- Bridges
  - Backward learning
- Bridge Loops
  - Spanning trees (transparent bridges)
  - Source-routing bridges (e.g., token rings)

Repeaters

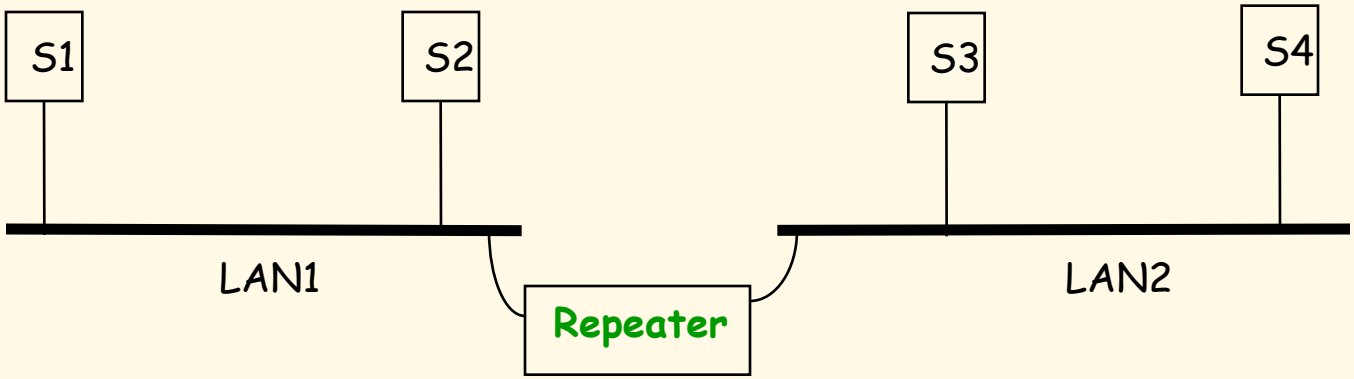

A **repeater** operates at the physical layer and forwards everything between the two LANs.

LAN1 and LAN2 are in the same **collision domain**.

Bridges

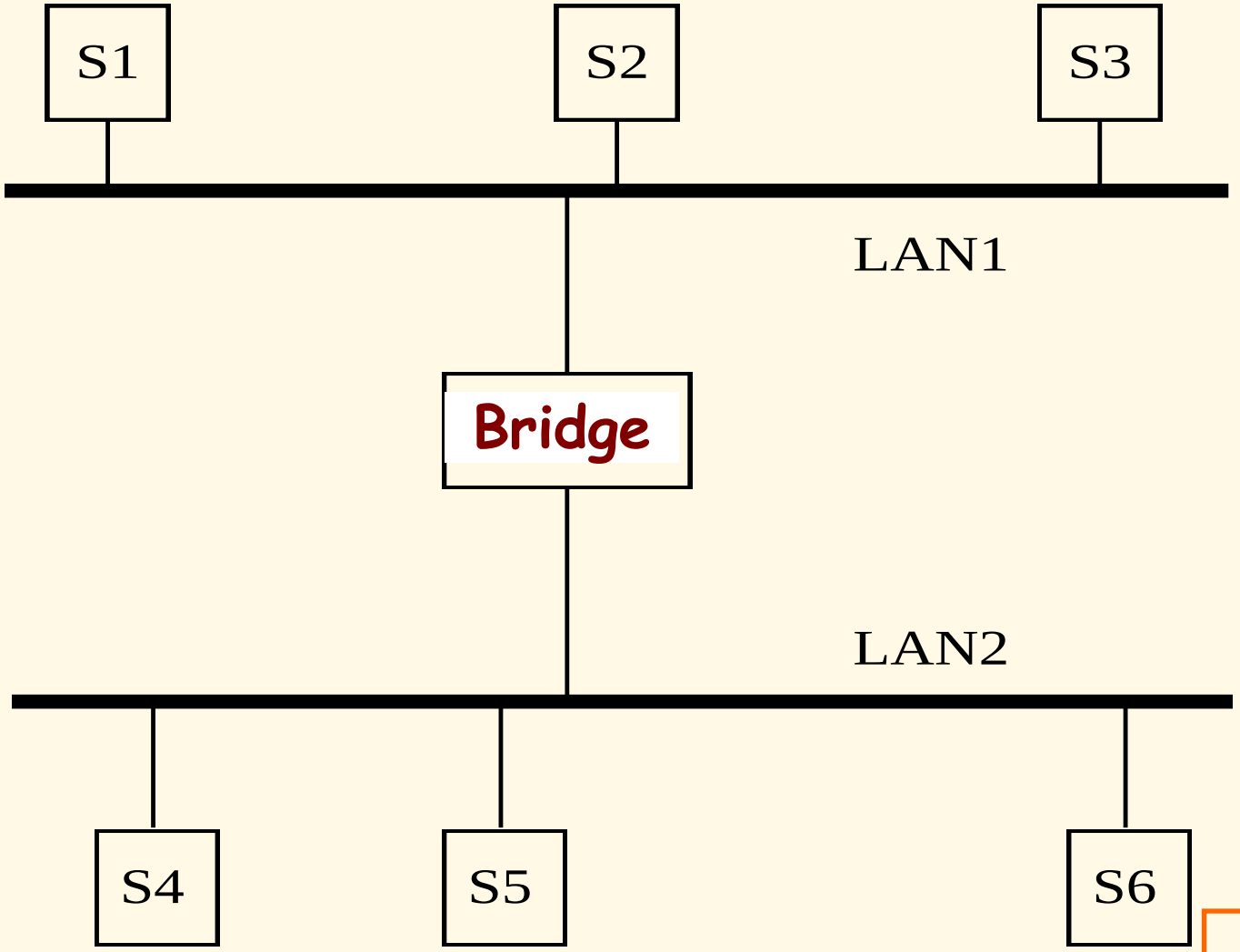

Leon-Garcia & Widjaja:
Communication Networks

Bridges

- Operate at the data link layer.
- Bridges use backward learning in recording source address on transmissions.
- Unlike repeaters, bridges will not forward a frame onto another LAN segment if it knows about the location of the destination node.
- Bridge management gets more complicated when loops are possible in the frame route.

Bridge

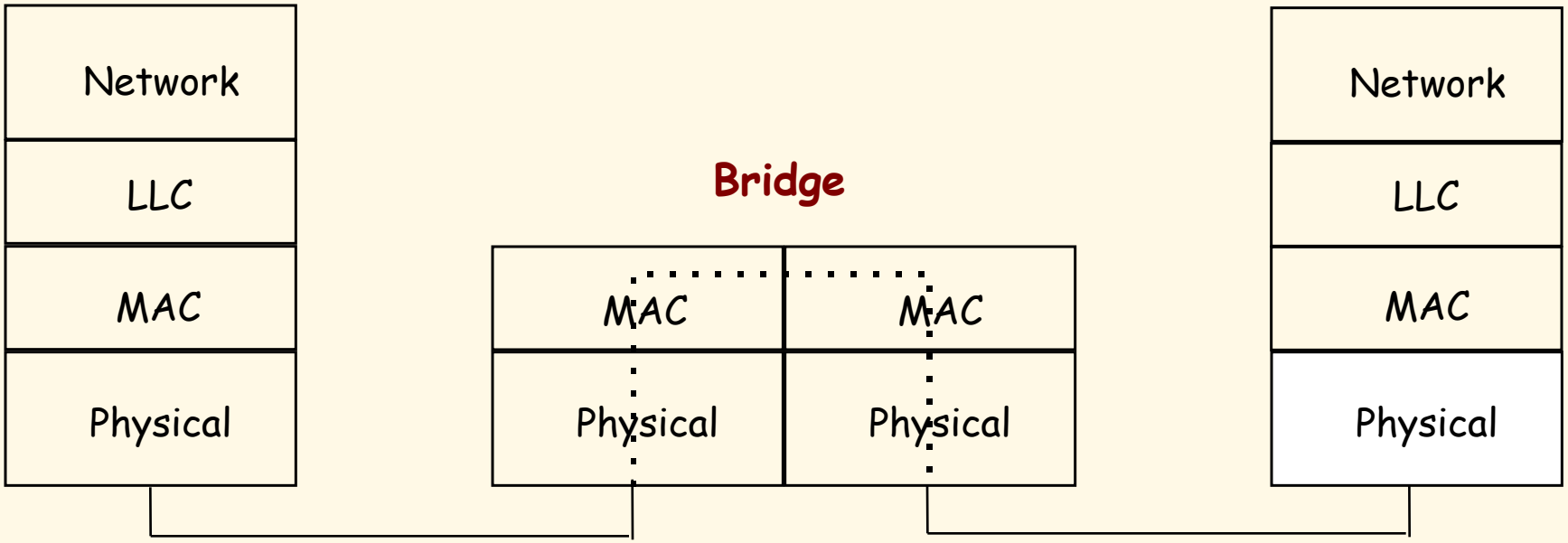

A bridge is a store and forward device that **separates** collision domains.

Bridges

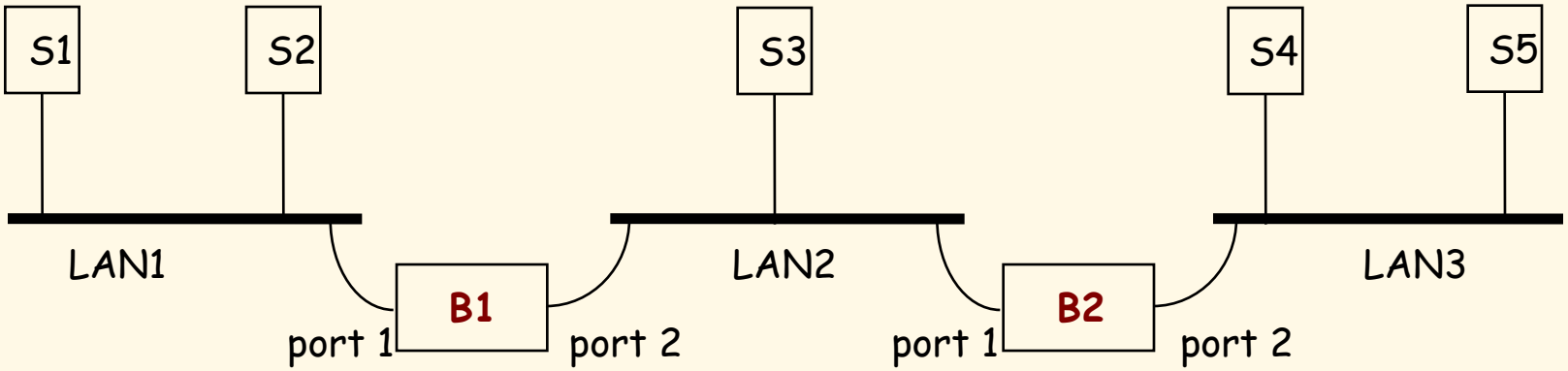

Address	Port

Address	Port

Leon-Garcia & Widjaja:
Communication Networks

Bridges

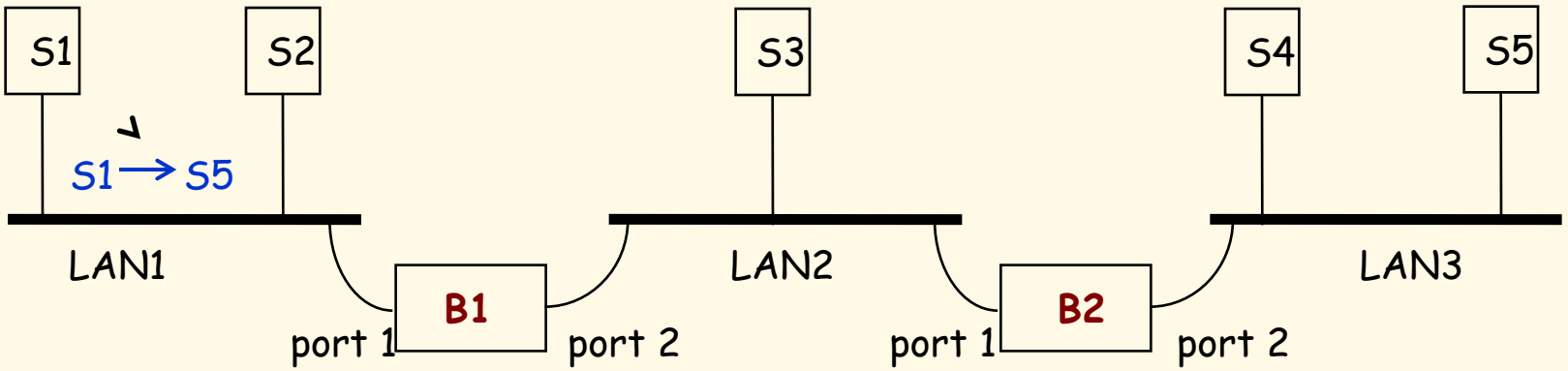

Address	Port
S1	1

Address	Port
S1	1

Leon-Garcia & Widjaja:
Communication Networks

Bridges

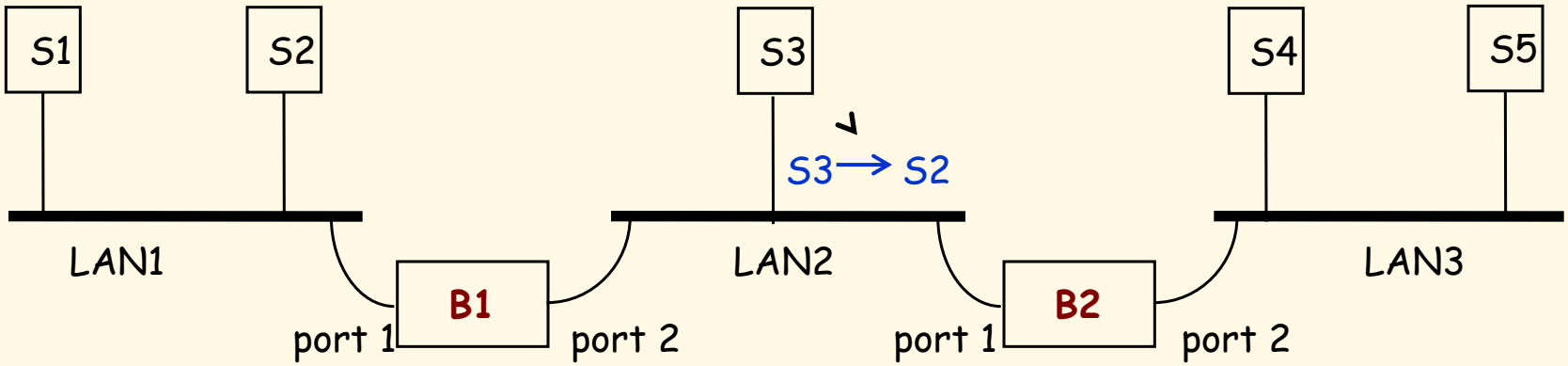

Address	Port
S1	1
S3	2

Address	Port
S1	1
S3	1

Leon-Garcia & Widjaja:
Communication Networks

Bridges

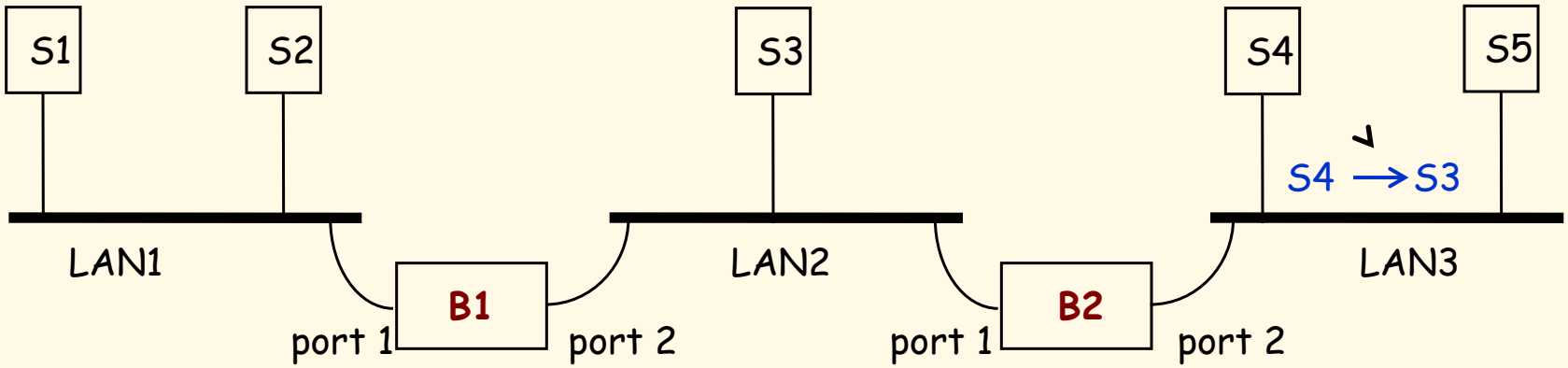

Bridge 1 does not forward the frame to LAN1

Address	Port
S1	1
S3	2
S4	2

Address	Port
S1	1
S3	1
S4	2

Leon-Garcia & Widjaja: *Communication Networks*

Bridges

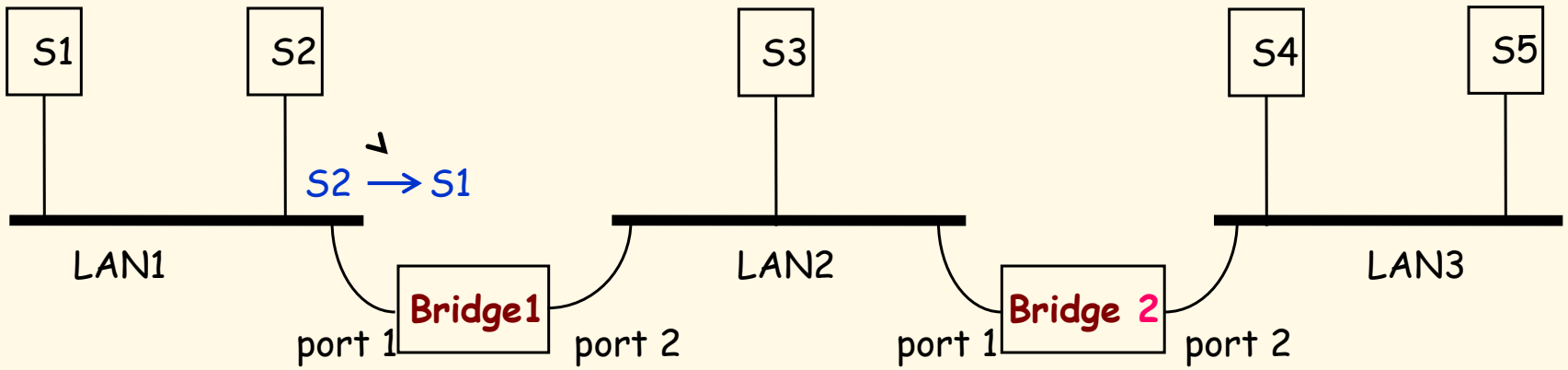

Bridge 1 does not forward the frame to LAN2

Address	Port
S1	1
S3	2
S4	2
S2	1

Address	Port
S1	1
S3	1
S4	2

Leon-Garcia & Widjaja: *Communication Networks*

MAN with Bridge Loops

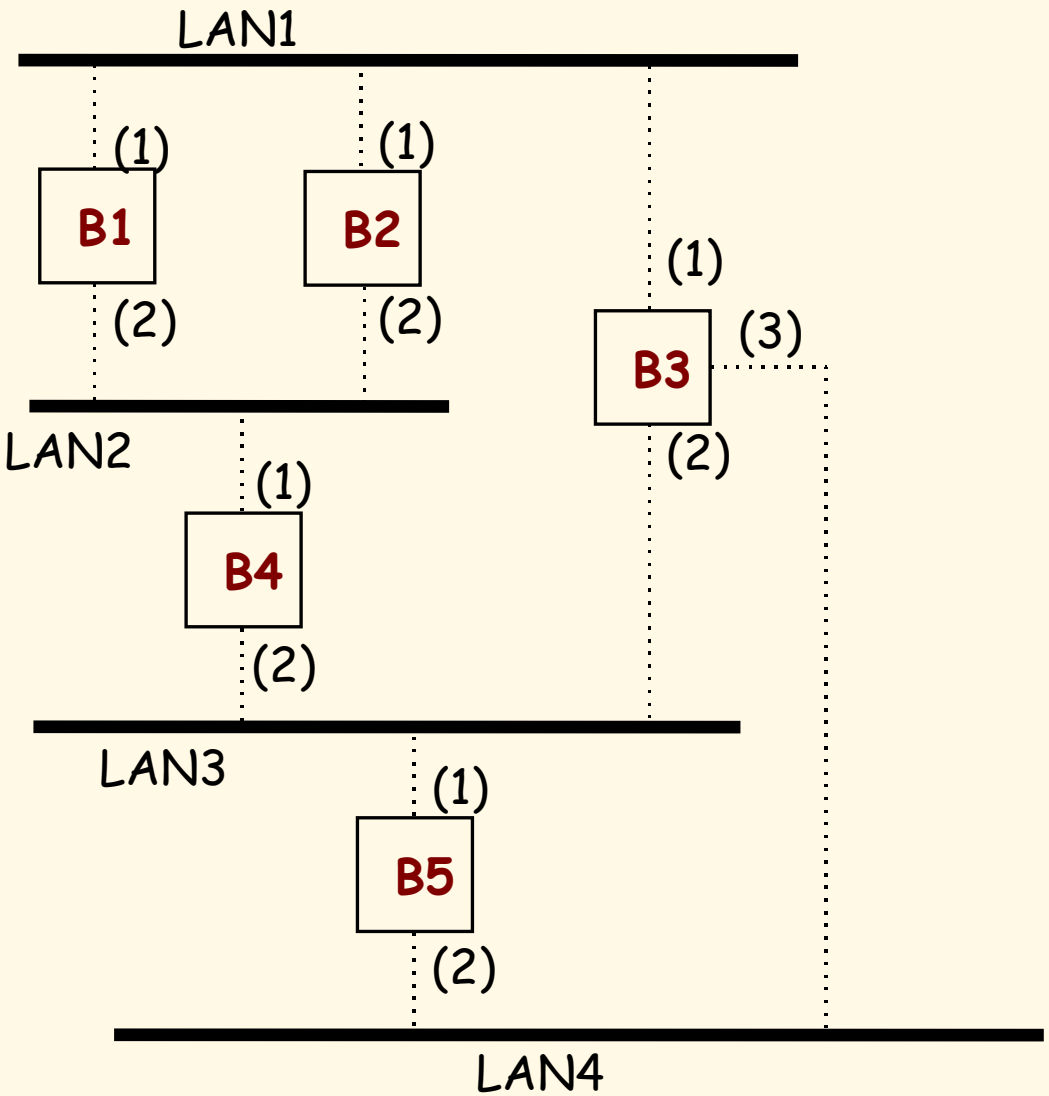

Leon-Garcia & Widjaja:
Communication Networks

MAN with Bridge Loops

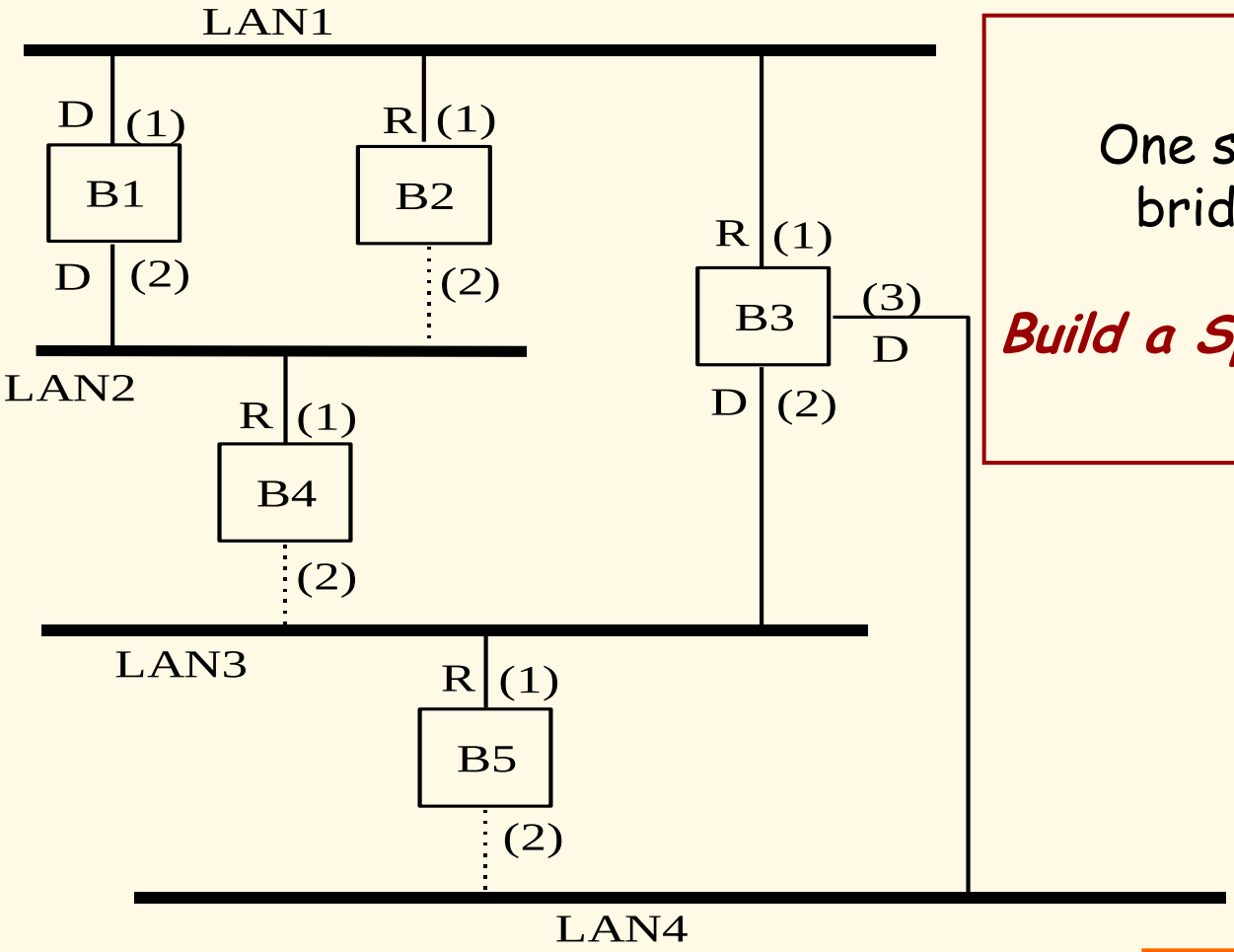

One solution to bridge loops

Build a Spanning Tree!

Leon-Garcia & Widjaja: *Communication Networks*

Bridges Summary

- Repeaters
- Bridges
  - Backward learning
- Bridge Loops
  - Spanning trees (transparent bridges)
  - Source-routing bridges (e.g., token rings)