Ubiquitous and Mobile Computing
CS 525M: *Middle Project Update*

Wei Wang, Baoyuan Xing, Zhilu Chen,
Shenwen Han, Xiaochen Huang

Computer Science Dept.
Worcester Polytechnic Institute (WPI)

The Digital Hearing Aids System on Android Platform

- Speech Processing in Frequency Domain
  - Split the acoustic signals into many sub-band signals
  - DFT (Discrete Fourier Transform) filterbank Algorithm

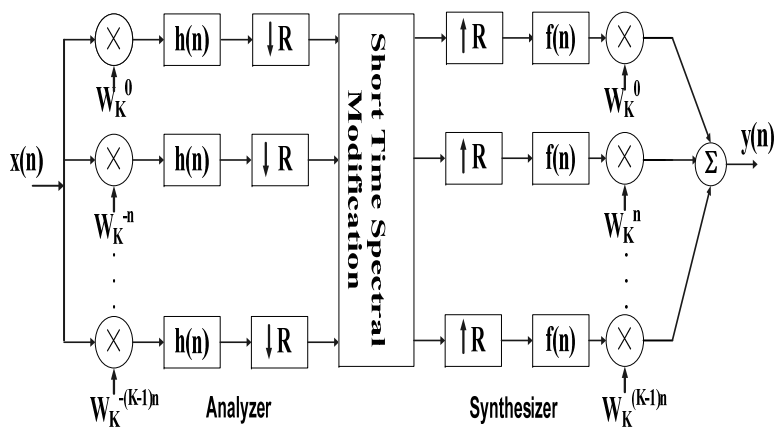

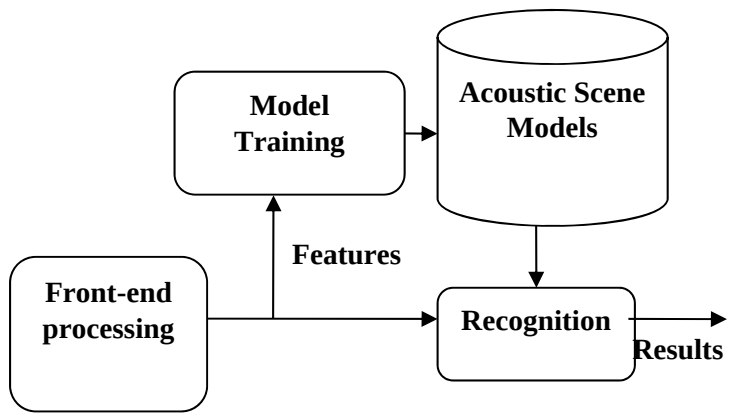

  - Sound Classification
  - Voice, Crowded Environment, Music Environment, …
  - MFCC(Mel-frequency Cepstrum)+GMM(Gaussian Mixture Models)

So far…

- Speech Processing in Frequency Domain
  - Use the WOLA(Weighted Overlap-Add) as a high efficient implementation for DFT filterbank Algorithm. Write Matlab codes and test the algorithm. Basically the algorithm works. (Wei Wang)
  - Write part of the Java codes; Construct development environment——Eclipse with Android SDK Tools; Learn about OpenCL. (Shengwen Han and Xiaochen Huang)
  - Sound Classifciation
  - 12-dimension MFCC as the feature and GMM-based classifier
  - Write Matlab codes for the sound classification and test the algorithm. Basically the algorithm works. (Wei Wang)
  - Write part of the Java codes for the algorithms. (Baoyuan Xiang and Zhilu Chen)

The plan

- Speech Processing in Frequency Domain
  - Implement the algorithms using Eclipse;(Shengwen Han and Xiaochen Huang)
  - Testing (Shengwen Han);
  - Implementing speech algorithms on the GPU of phone using OpenCL (Xiaochen Huang)
  - Sound Classifciation
  - Continue to improve and test the algorithm. (Wei Wang)
  - Finish the Java codes and build the App on the Android platform. (Baoyuan Xing and Zhilu Chen)