Emerging Challenges: Mobile Networking for “Smart Dust”

Joseph M. Kahn, Randy Howard Katz and Kristofer S. J. Pister

Presented by: Patrick Gemme

Overview

- Focus
- Hardware
- Challenges
- Technology
- Applications
- Related Project
- Conclusions

Focus

- **Large scale network of Wireless sensors are becoming more and more plausible**

- **Networking and application layers are needed to make such a system usable.**

Hardware

- Can now integrate sensing, communication, and power supply into an inch-scale device. (off-the-shelf)

- 3 technologies leading this advance:
  - Digital circuitry
  - Wireless communications
  - Micro ElectroMechanical Systems (MEMS)

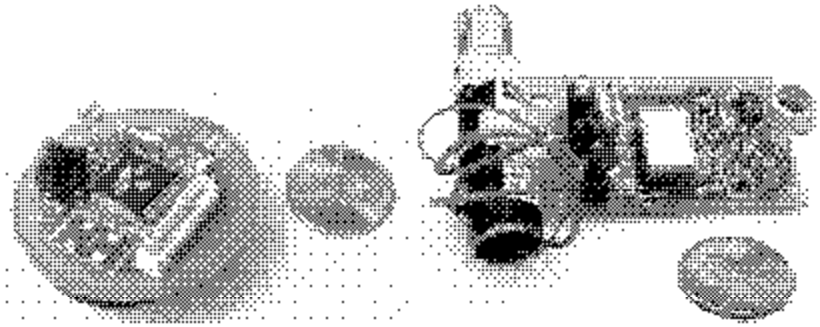

Key Challenges

- Must consume extremely low power
- Must communicate at average bit rates measured in kilobits p/sec
- Must operate in high volumetric densities

- How?
  - Needs ad hoc routing
  - Media Access solutions

Smart Dust mote

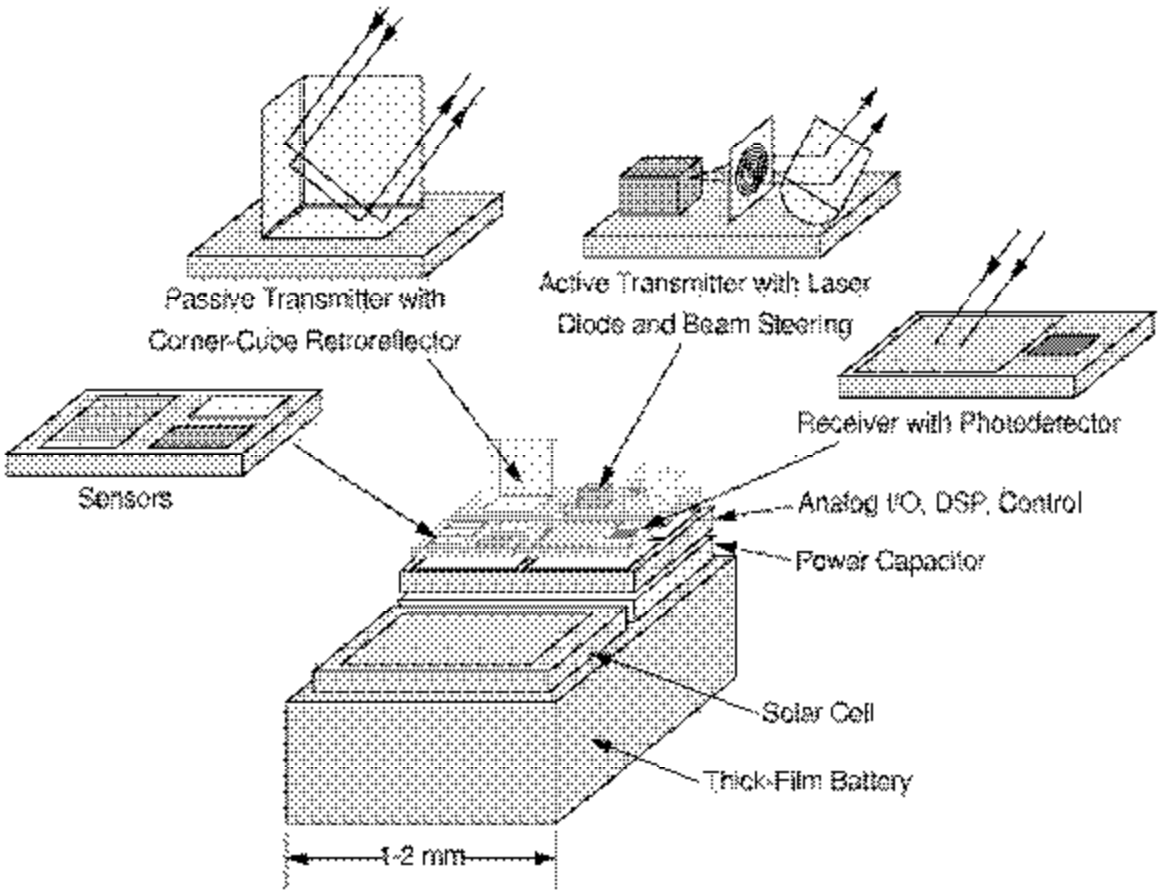

Fig. 2. Smart dust mote, containing microfabricated sensors, optical receiver, passive and active optical transmitters, signal-processing and control circuitry, and power sources.

Energy

- **Total Stored energy is on the order of 1 J**
  - **If that is consumed continuously over a day, then the dust mote power consumption cannot exceed roughly 10mW**
- **Solar cells could gain about 1 J per day in the sun**
- **Energy-optimized microprocessors user about 1 nJ per 32-bit instruction**
  - **Bluetooth burns about 100nJ per bit transmitted**
  - ***Picoradios* target 1nJ/bit –which will allow billions of operations per Joule**

Ultra-low power: RF or Optical

- **RF cons:**
  - **Extremely short-wavelength transmission**
  - **Energy Issues**
    - **Difficult to reduce to such low power consumption**
- **Optical Cons:**
  - **Line-of-sight needed (within a few tens of degrees)**

Optical Pros

- High antenna gain can be achieved with very low power
- A base-station can decode simultaneous transmissions with Space-division multiplexing
- Passive optical transmission
  - No optical power needed
    - Corner-Cube Retroreflector (CCR)

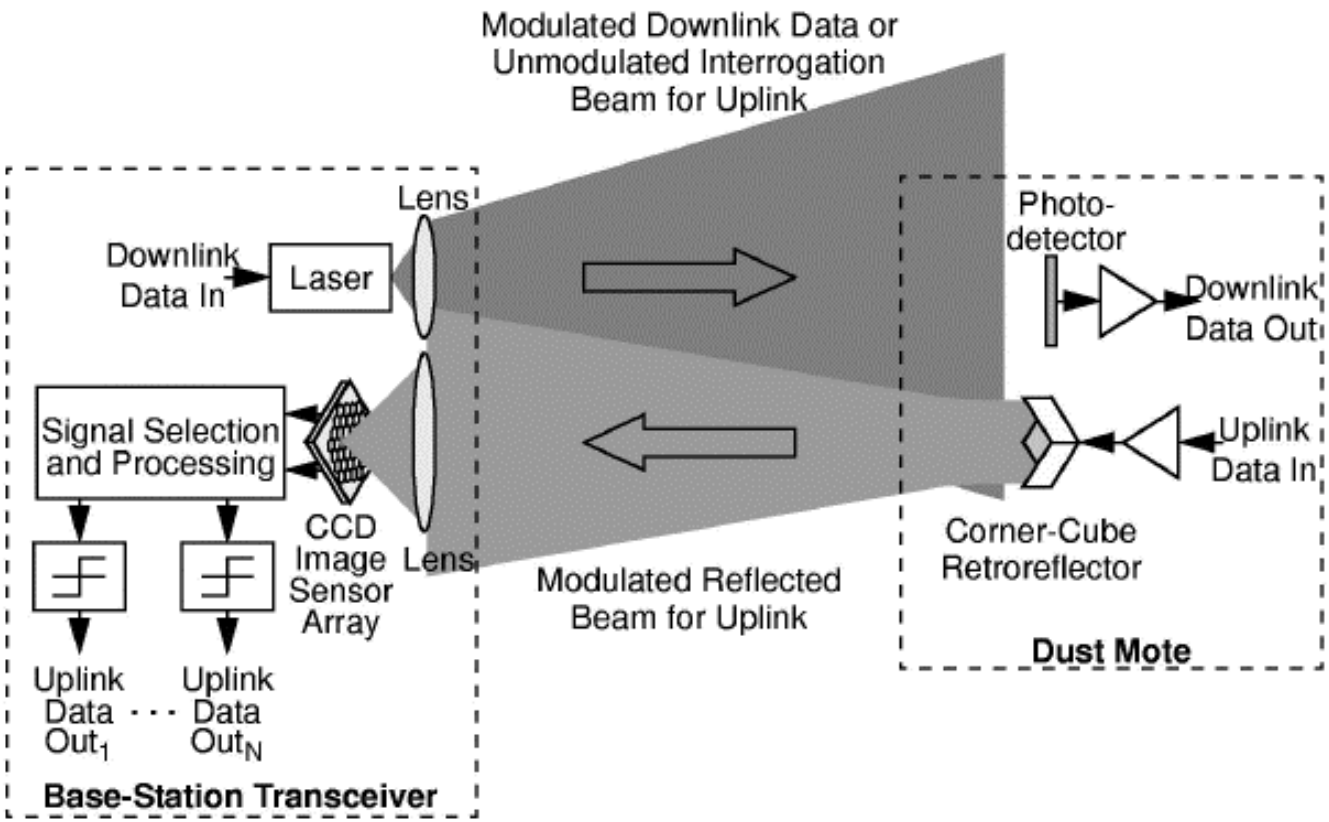

Achieves several kilobits per second over hundreds of meters in full sunlight

At night it should extend to at least a kilometer

Line-of-sight?

- Receiver is fairly omni-directional (forget about it)

1. With one CCR a mote has about a 10% chance of being able to transmit to BTS
   - Equip it with several CCRs
2. Distribute an excess number of motes (expecting many to not be able to communicate)
3. Steer the Beam in the right direction

MAC protocol

- Sensor-MAC (S-MAC)
- Etiquette Protocol
- CSMA for Sensor Networks
- Z-Mac

Passive and Broadcast-oriented techniques

- A single wide beam from BTS can simultaneously probe many dust motes
- Motes transmit in short-duration burst signals
  - similar to cell phones
- BTS grants channels to requesting nodes
- There are as many channels as resolvable pixels at the BTS

Applications

- **Used to record data for meteorological, geophysical or planetary research**
- **Environments where wired do not work**
  - **(semiconductor processing chambers, rotating machinery, wind tunnels, anechoic chambers)**
- **Biological:**
  - **Measure movements, habits, and environments of insects and small animals**
- **Military:**
  - **(passage of vehicles, perimeter surveillance, chemicals)**

Operate in Ensembles

- **Sensors can specialize in certain signatures and combine for more useful information**
  - **A change in temperature may not mean much**
  - **A change in sound level probably doesn't tell us enough**
  - **Movement could mean many things**
- **The combined array through P2P could determine that a vehicle just pulled up with at least 2 men**

Why is *Ad hoc* needed?

- **The centralized/passive scheme is most power efficient way to communicate.**

- **Line-of-sight (again)**
  - **The mote will have to use Ad hoc if line-of-sight to BTS is not possible**
  - **Requires 4 phase handshake**

- **Standard routing algorithms like RIP, OSPF, and DVRMP assume bidirectional and symmetric links**
  - **New routing algorithms must be able to deal with unidirectional and/or asymmetric links**

Related Projects

- **Factoid Project** at Compaq Palo Alto Western Research Laboratories
- **Wireless Integrated Network Sensors (WINS) Project** at UCLA
- **Ultralow Power Wireless Sensor Project** at MIT

Summary and Conclusions

- ***"Smart Dust"*** **has described an inexpensive way to setup small low power sensors which can communicate to a central BTS and/or each other**

- **Attacked the line-of-sight issue with 3 possible solutions**

- **Opened up leads into 3 main future work focuses**
  1. ***New routing algorithm to deal with unidirectional***
  2. ***A p2p collision avoidance scheme to deal with dynamic networks***
  3. ***A Beam-steering algorithm***