DIRAC: A Software-based Wireless Router System

Petros Zerfos, Gary Zhong, Jerry Cheng, Haiyun Luo, Songwu Lu, Jefferey Jia-Ru Li

Presented by: Stephen Kazmierczak

Overview

- Background
- Issues
- Motivation
- Design
- Implementation
- System Evaluation
- Conclusions

Background – Topology

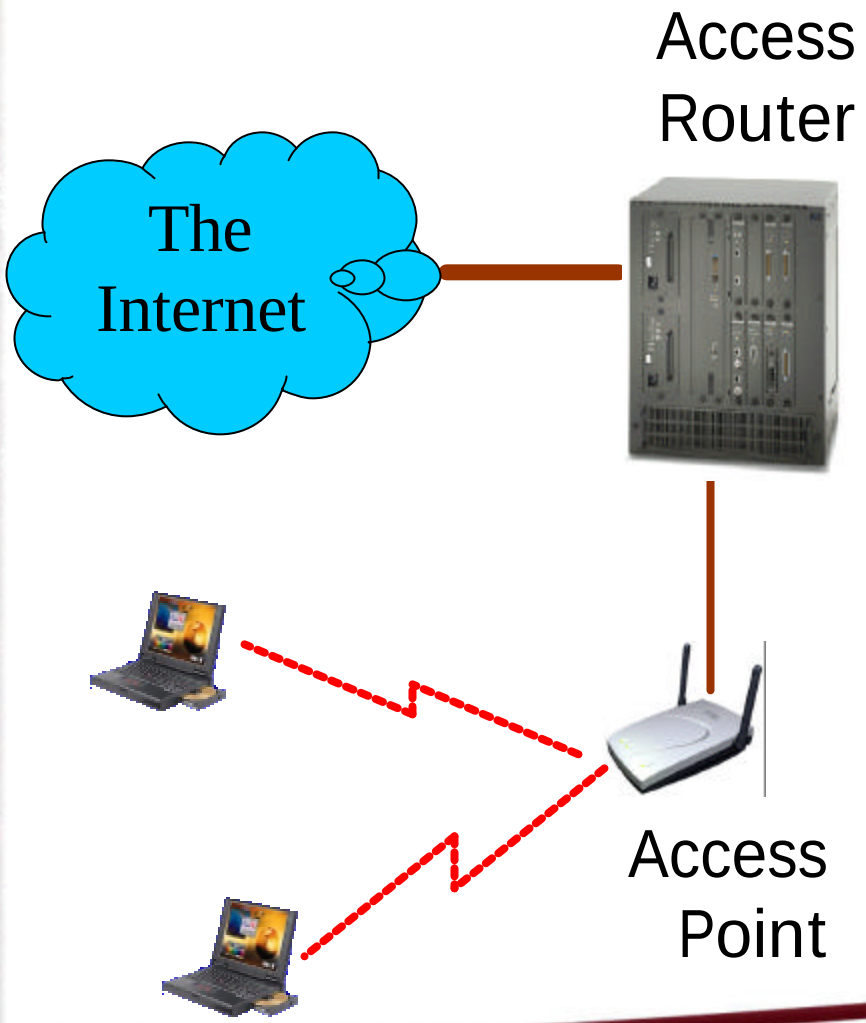

- **Typical 802.3/802.11 mixed network**
  - **Wireless "last hop"**
- **Multiple mobile hosts/AP, multiple APs/AR**
- **Hosts roam between APs**
- **Moderate Load/Traffic**
- **Wireless link is the bottleneck**

Issues

- New Internet services, such as packet filtering, intrusion detection, level-*n* switching, and packet tagging
  - But current routers do not work well in a wireless network
- Protocols have been proposed to achieve above goals
  - Use link-layer information feedback, such as channel errors and link handoff events
  - Work in simulation, not in practice
  - Why? System framework missing

Motivation

- Significant increase in demand for wireless services
  - Carrier-grade data delivery, security, QoS, VoIP, interactive multiplayer gaming, multimedia IM
- Protocol solutions devised, but a system support framework is needed

Motivation *(cont.)*

- **Some services require inter-cell coordination across multiple APs**
  - **Roaming users use resources in both the time and spatial domains**
  - **Wireless resource management schemes must coordinate decisions among neighboring cells**
- **DIRAC seeks to enable inter-cell coordination, to enable seamless services and minimize inter-cell channel interferences**

Motivation *(cont.)*

- **Typical wireless network has a large number of APs, posing the challenge of minimizing software and hardware costs and configuration management**
- **Must intelligently partition software between APs and AR, with most complexity at centralized router**
- **Software-based frameworks provide extensibility and flexibility, accelerates implementation, experimentation, and deployment**

Design – Alts

- **Alternative Architectures**
  - **AP delivers 802.11 MAC functionality only (current practice)**
  - **Intelligent AP: adaptive link-layer services implemented at each network-layer oblivious access point**
  - **Ubiquitous router: turns each AP into a router**

Design – DIRAC

DIstributed Router ArChitecture

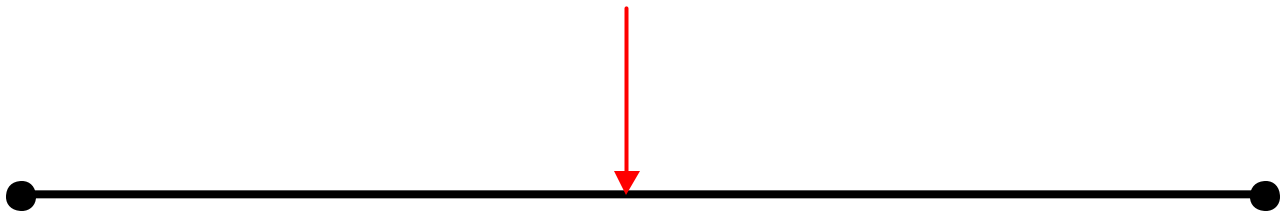

Oblivious Approach

- Current practice
- No interaction between AR←→ APs
- Difficult to implement wireless router services

Integrated Approach

- Convert *every* AP to AR
- Collapse L2 and L3 layers
- Increased Cost
- Complicated Management

Design – RC & RAs

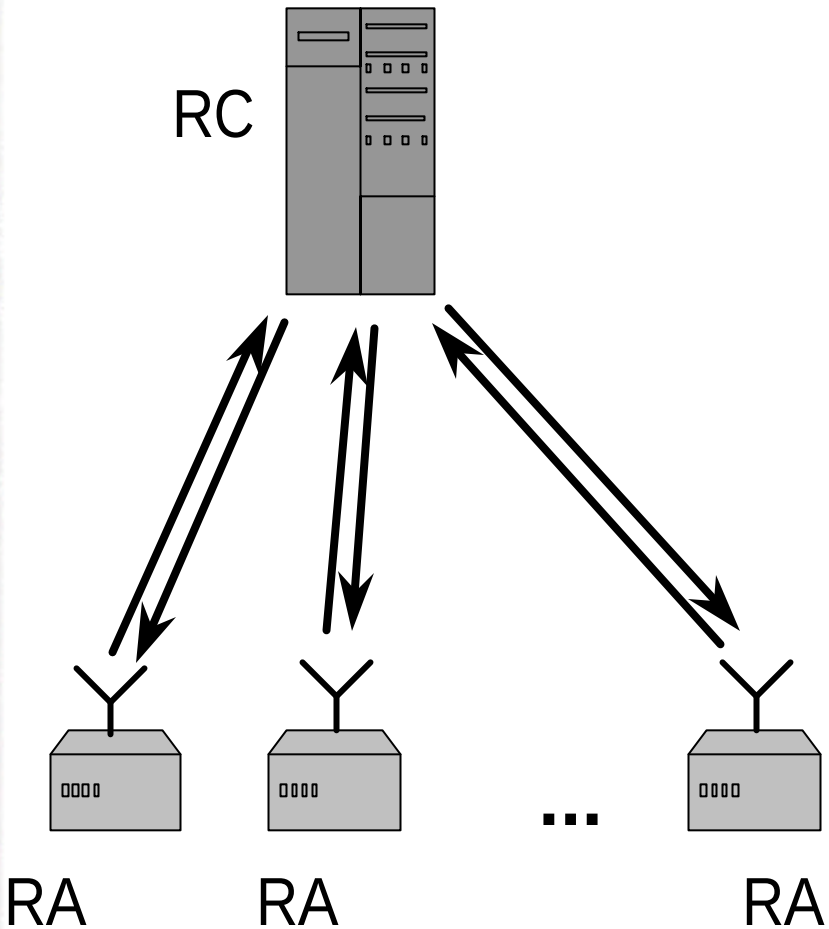

- **Central Router Core (RC)**
- **Multiple Router Agents (RAs)**
- **Interaction constrained:**
  - **Events**
  - **Statistics**
  - **Actions**

Design – RA

- RA is link-layer specific and light-weight
  - Serves as a messenger between the RC and the link-layer device driver
  - Communication between RC and RA via standard UDP sockets

Design – RC

- RC carries out regular router operations for each wireless subnet
- Forwarding engine addresses wireless link issues
  - Accepts link-layer info and performs adaptive forwarding operations
  - Can request *actions* of RAs
  - Accepts *events* from RAs
- RC contains a DIRAC control engine

Design – RC/RA Interaction

- *Events* denote occurrences of asynchronous link-layer activity
  - Use: mobility-aware decisions
- *Statistics* report latest channel quality information
  - Use: channel-adaptive packet delivery
- *Actions* enforce RC policies

Design – Router Core

Adapted control-plane management protocols and data-plane forwarding engine to be wireless and mobility aware

Design – RC Ctrl Plane

- Routing and management protocols
- Control engine
  - OS support to enable cross-layer interactions
  - Four components: EventProcessor, StatisticsMonitor, ActionProcessor, and RegistrationDB

Design – RC Data Plane

- Allows components to implement channel-adaptive protocols, based on link-layer feedback
  - DIRAC does not stipulate the specific choice of protocol
- Forwarding engine provides asymmetric operations for uplink and downlink
  - Downlink proactive, uplink reactive

Design – Router Agent

- Bridges interaction between RC and wireless link layer, a light-weight messenger between layer-2 of the AP and layer-3 of the RC
  - Monitors state and channel quality
  - Sends event messages to RC
  - Intercepts action commands from RC

Implementation – Router Core

- **IPv6**
- **Set of *Click Elements* within the *Click Router* framework under Linux**
  - **Developed 13 new Click elements**

Implementation – Router Agent

- OpenAP platform
- WL11000 SA-N board
  - Wired Ethernet controller (NE2000)
  - AMD ELAN SC400 @ 33MHz
  - 1MB of Flash RAM
  - RS-232 serial interface
- Wireless PCMCIA 802.11b
- Embedded Linux 2.4.17

Implementation – RA (cont)

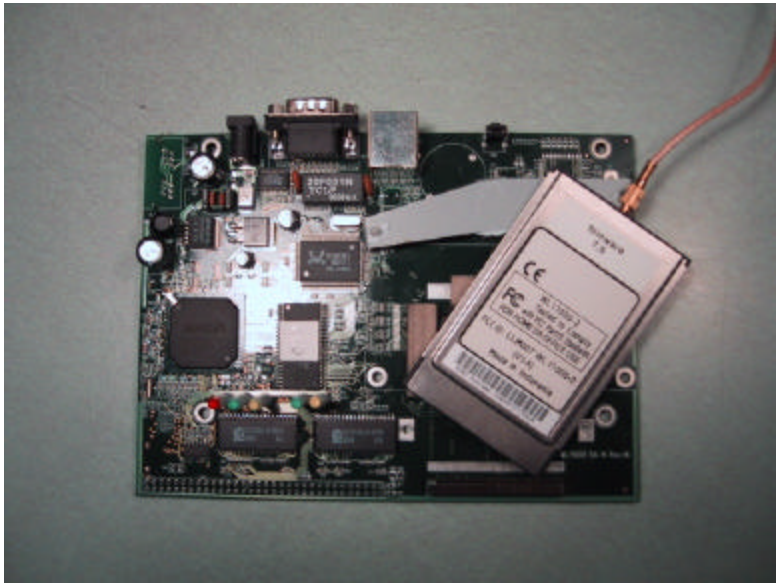

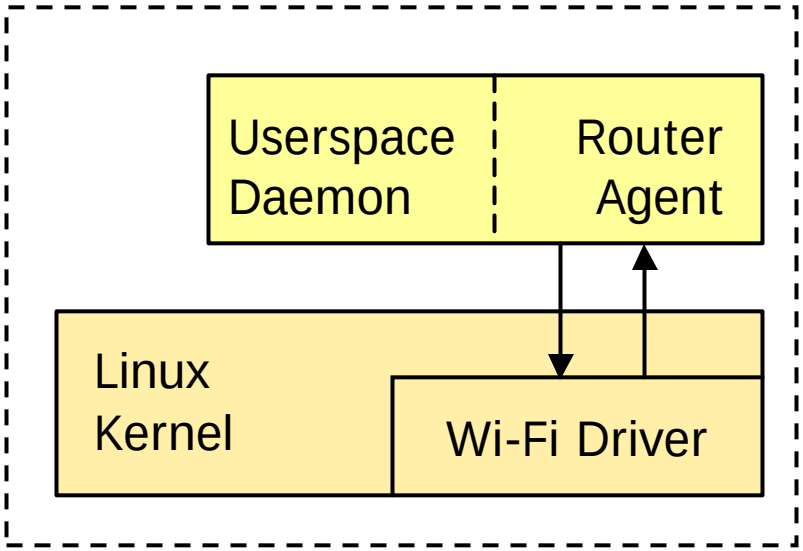

- **Wireless Linux Extensions for *monitoring***
- **802.11 frame snooping for *events***
- **Customized 802.11 management frames to *enforce actions***

Implementation – RC/RA Comm

- Simple UDP protocol for exchanging information
  - Packet format: Type, Subtype, Len, Data
    - Type: Statistic, Event, Action, Registration
    - Subtype: Specific instance of type
    - Length: in bytes of Data field
    - Data: “Value” - actual information

Implementation – Prototype Wireless Services

- **Link-Layer Informed Fast Handover**
  - **Reduced latency and minimized loss when roaming between subnets**
- **Channel-Adaptive FEC-Based Downlink Forwarder**
  - **Addresses wireless Head-of-Line blocking problem**
- **Link-Layer Assisted Uplink Policing**
  - **Temporarily squelches aggressive uplink flows**

System Evaluation – Overhead

RC:

- Intel Pentium III @ 900MHz
- 256 MB RAM
- Intel Ethernet Express 10/100

- Performance scaled linearly based on # of APs and # of mobile clients

Operation	Time (ns)
Action	498
Event	1712
Statistics Report	32
Basic Forwarding	1299

System Eval – Fast Handover

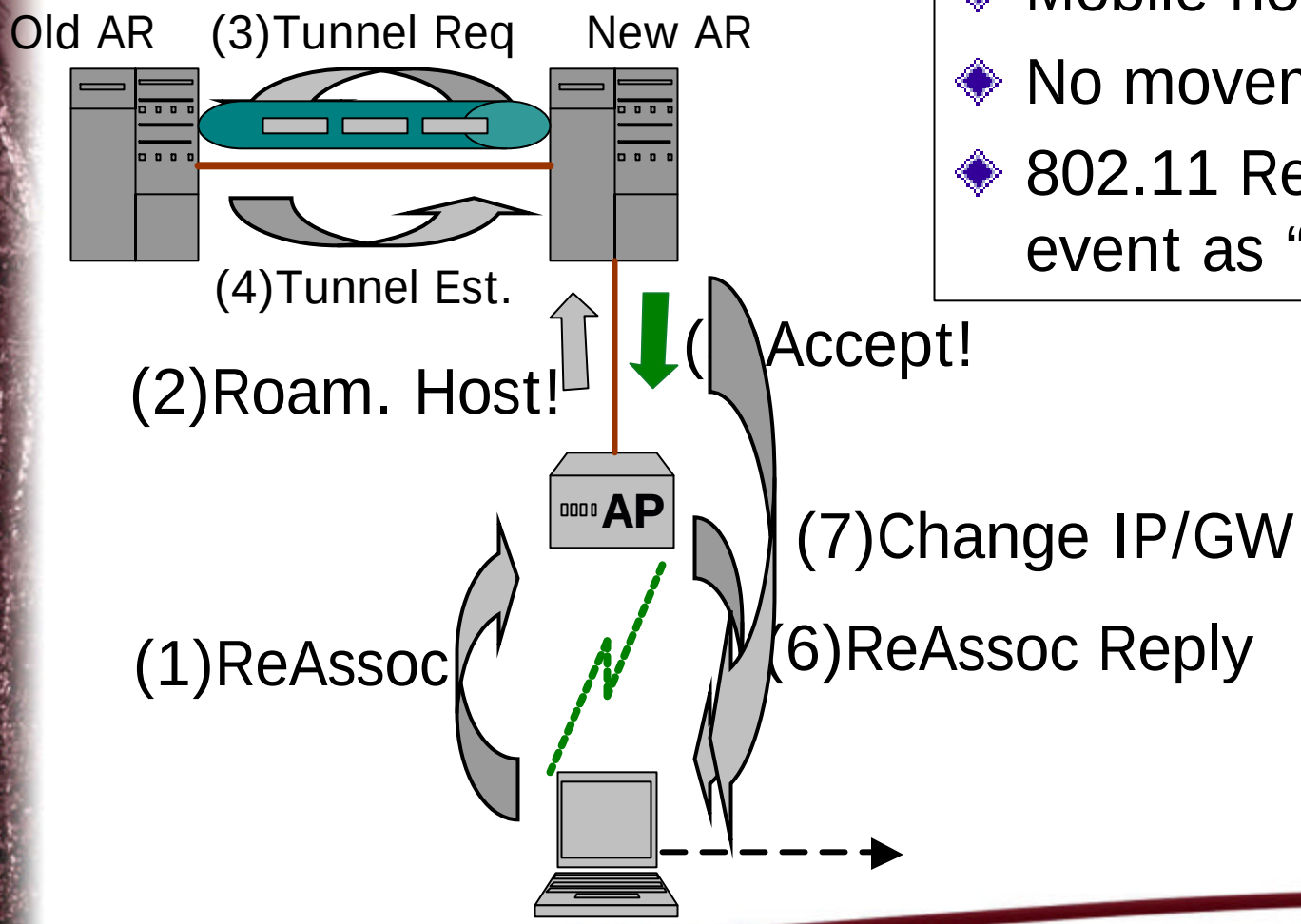

- Mobile node-initiated
- No movement prediction
- 802.11 ReAssociation event as “trigger”

System Eval – Fast Handover Performance

	Mean	Median	stdv
Tunnel Establishment	4.2	3.6	1.5
Additional latency to complete L2 assoc.	7.9	7.4	1.8
Time to send new IP/GW	18.6	18.8	3
Time for MN to change IP/GW	8.1	6	6

latencies are in milliseconds

System Eval – FEC-based Downlink Forwarding

- RA reports channel quality to RC
  - RC determines that channel quality is not acceptable; requests disabling of retransmissions
- FEC implemented on RC
  - FEC compensates for unreliability
  - Strength of FEC adaptive to transmission rate *and* quality of the channel
- Nodes with a good channel do not experience packet loss

System Eval – DL Forwarding Results

Ave. Quality	Stdv	MN1	MN1	MN3
10.38	1.53	9903	9830	2647
12.38	1.46	9980	9940	7450
15.02	2.01	9980	9978	9581
20.17	1.54	9943	9903	9985

FEC-Based Approach

Ave. Quality	Stdv	MN1	MN2	MN3
9.47	2.17	4808	4807	3038
12.21	1.81	7559	7554	6558
14.81	1.76	9999	9999	9822
20.44	1.98	9999	9999	9988

Link-Layer Retransmissions

#packets received by each node, out of the 10,000 sent

System Eval – Policing

- Two mobile nodes, MN1 and MN2, competing for wireless channel
  - MN1 running a 128kbp streaming MP3 server over TCP
  - MN2 sourcing 3.6Mbps of UDP traffic
- Without policing, MN2 occupies the majority of the channel
  - So much so that TCP cannot maintain connection

System Eval – Policing

- With policing MN1 is protected from MN2
  - RC can instruct the AP to limit MN2's access
  - MN2 is constantly being limited, but MN1 is now able to run to completion

Conclusions – RC

- Scales well
  - Consumes processing power less than 2.5% of standard packet forwarding cost
  - Takes less than 1us to process channel states for 50 clients per AP
  - Supports a large number of APs
    - Less than 140us required to process statistics from 50 APs, each which transmits 20 reports per second

Conclusions – Services

- **Enables deploying of critical wireless network services**
  - **Fast handover service creates a tunnel for packet forwarding in under 10ms**
  - **FEC-based forwarding solves HoL blocking problem**
  - **Policing service protects flows**

Conclusions – Summary

- Motivated by wireless-adaptive and mobility-aware service
- Two-way interaction between Access Routers & Access Points
- Enable implementation of wireless router services
- Low cost of deployment/management